CH40810 | REV A

ALL INFORMATION CONTAINED IN THIS DOCUMENT SHOULD BE USED FOR REFERENCE PURPOSES ONLY & ARE SUBJECT TO CHANGE WITHOUT PRIOR NOTIFICATION. ALSO, THIS DOCUMENT IS CONSIDERED PROPRIETARY & THE SOLE PROPERTY OF CRYOMECH, INC. & SHOULD NOT BE REPRODUCED IN ANY MANNER WITHOUT PRIOR WRITTEN APPROVAL.

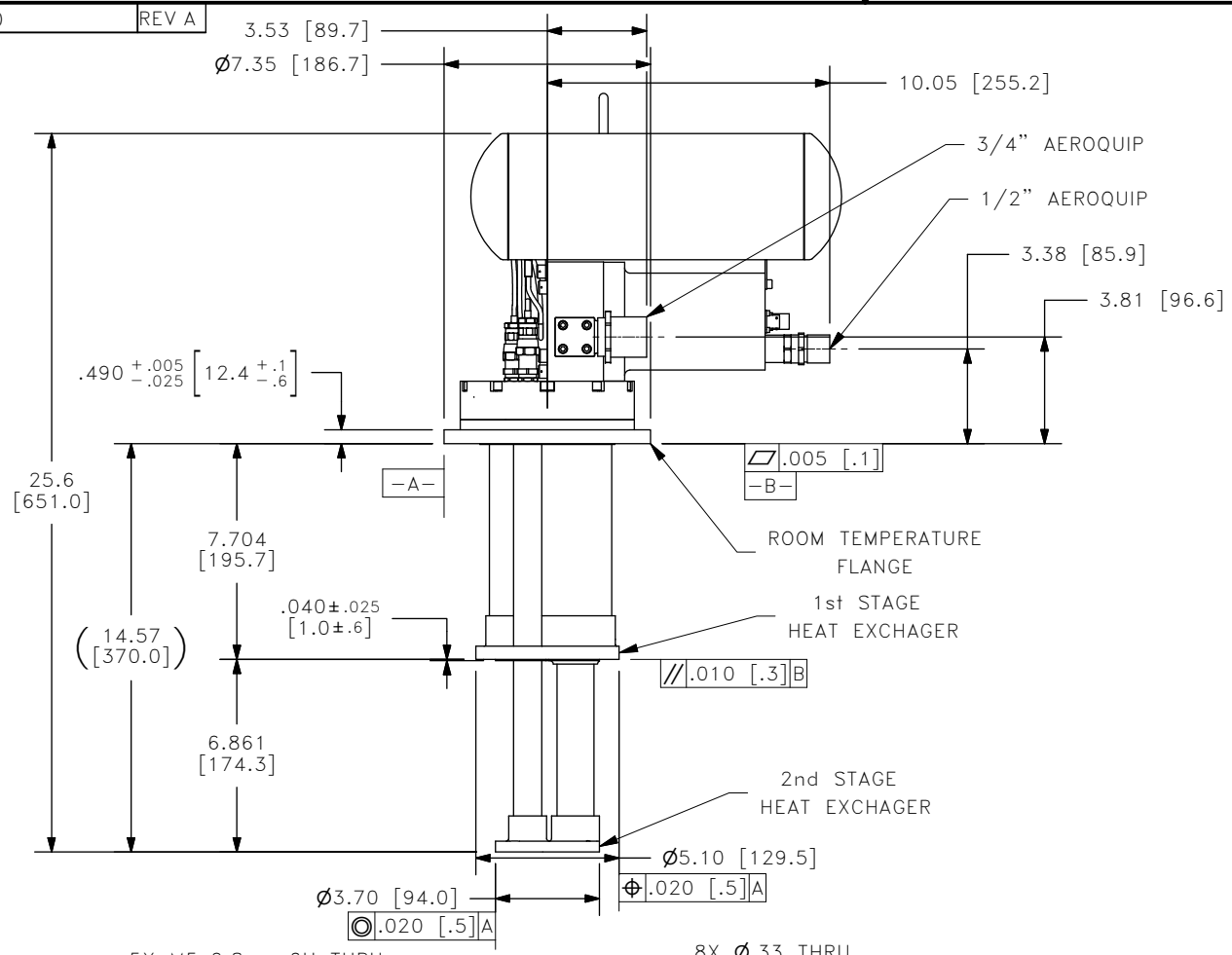

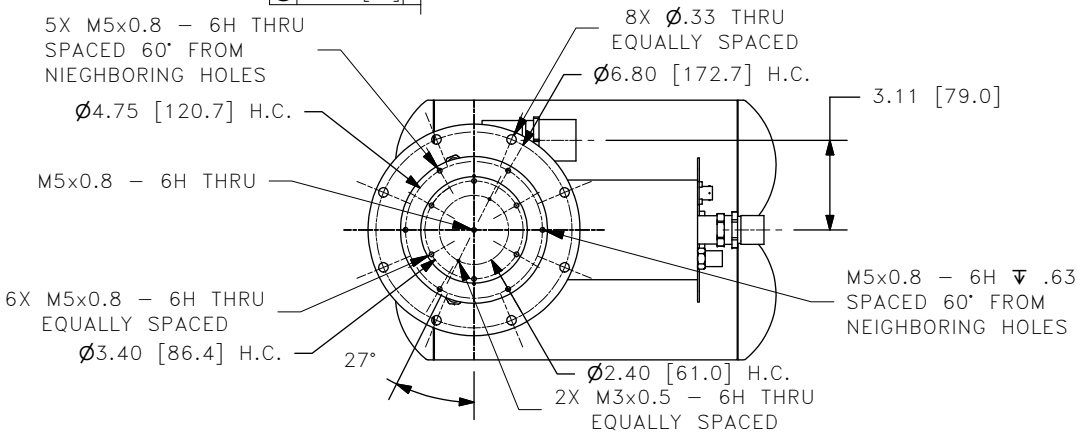

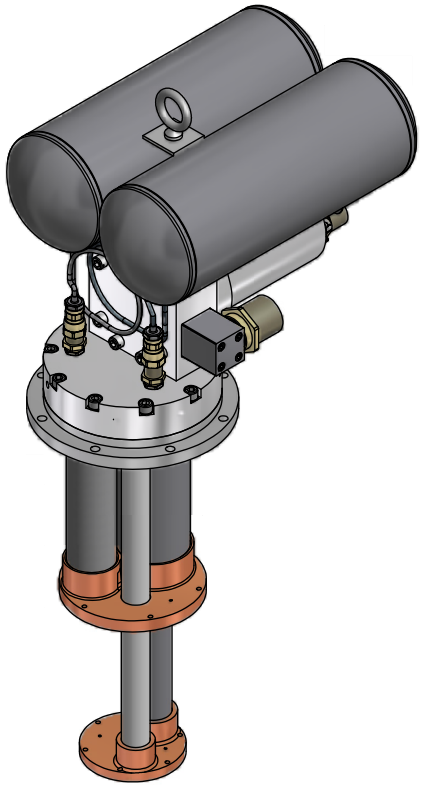

COLD MUST BE OPERATED WITH COLD END DOWN AS SHOWN.

THIRD ANGLE PROJECTION

CRYOMECH, INC
113 FALSO DRIVE SYRACUSE, N.Y. 13211
Tel: (315)455−2555 Fax:(315)455−2544

ALL DIMENSIONS ARE IN INCHES
TOLERANCES: FRACTIONS ±1/32 DECIMALS XXX=±.005 XX =±.01
ANGLES ±.5° ALLOVER FINISH 25 Ra
CONCENTRICITY .005 TOTAL INDICATOR RUN OUT
PERPENDICULAR ±.002 (UNLESS OTHERWISE SPECIFIED)

NAME: CH40810 COLDHEAD OUTLINE
DWG #: CH40810 | SHT 1 OF 1
MATERIAL: 103-23

ECN	ZONE	REV	DESCRIPTION	DATE
2238	−	A	ADDED 1pc 1st STAGE HEAT EXCHANGER	08SEP10
1100	−	−	INITIAL RELEASE	25MAY06

DWN BY: A.O. DATE: 30DEC03 | SCALE: .150 | DWG SIZE: A
1ST CHK: BAZ DATE: 20JAN04 | 2ND CHK: CW DATE: 30JAN04
CUST: | BTA: BTA-CH40810

THIS DRAWING SUPERSEDES CHPT810